PART NUMBER

KWG178105

REV.	DATE	COMMENTS	INITIAL

RoHS Compliant

Electrical Data

Impedance	50Ω
Frequency Range	6.5 - 18 GHz.
VSWR	1.30
Waveguide Type	WRD650D28
Flange Type	FPWRD650D28/ FMWRD650D28
Accessory	1pc Gasket mated with FMWRD650D28 flange

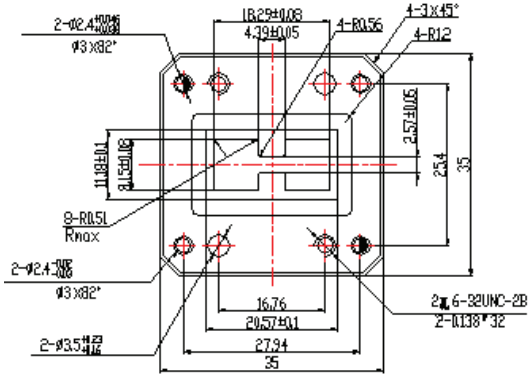

FMWRD650D28

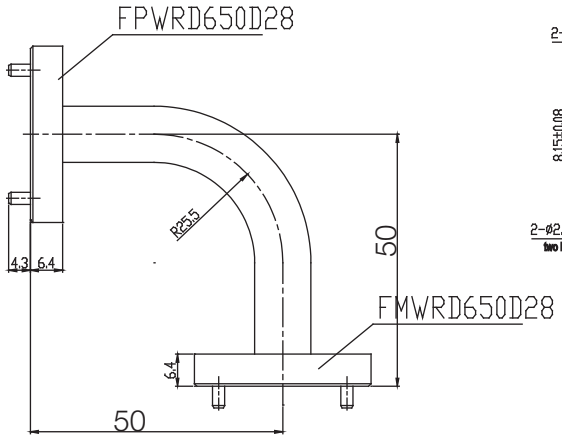

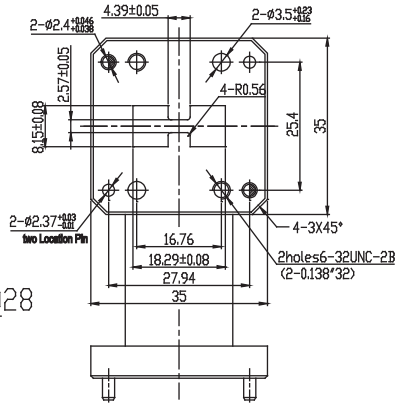

Drawing not to scale. Dimensions for reference only **Units: mm**

Konnect RF

WWW.KONNECTRF.COM
1-800-790-5887

PART NUMBER

KWG178105

DESCRIPTION **Double Ridge Waveguide E-Bend, WRD650D28**

CAGE CODE **664U0**

SIGNATURE X

Component	Material	Plating
Body	Brass	Copper
Inside Finish		Silver
Outside Finish		Anticorrosion Grey Paint

THIS DRAWING INCLUDING THE DESIGNS IS THE PROPERTY OF KONNECT RF AND IS NOT TO BE USED FOR ANY PURPOSE WITHOUT OUR APPROVAL.