PART NUMBER

KCC198262

REV.	DATE	COMMENTS	INITIAL

RoHS Compliant

Electrical Data

Impedance 50 Ω

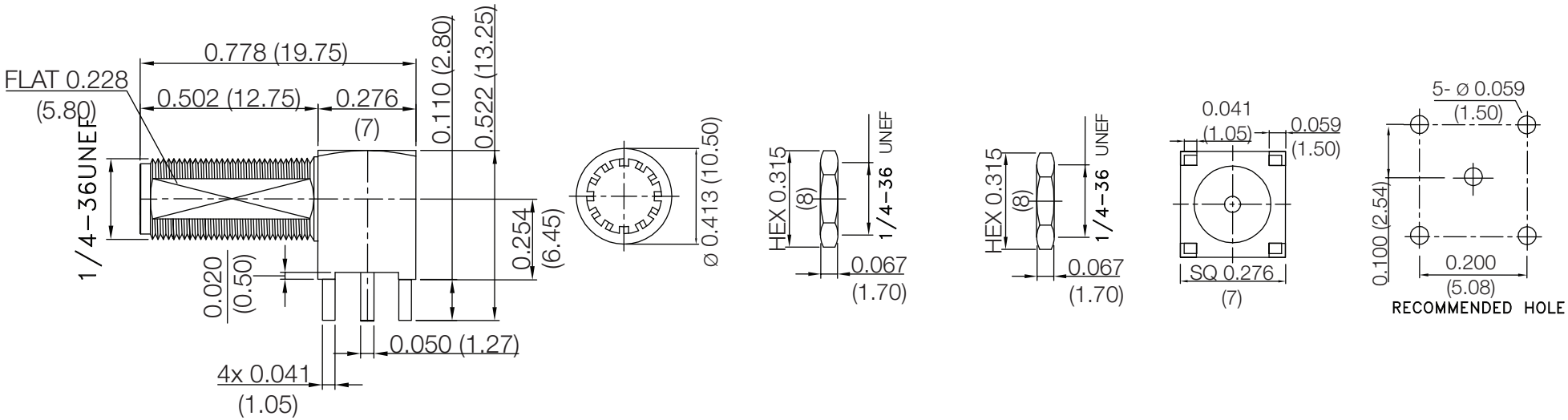

Drawing not to scale. Dimensions for reference only **Units: inches (mm)** ****This part comes with 2 Nuts**

Konnect RF

WWW.KONNECTRF.COM
1-800-790-5887

PART NUMBER

KCC198262

DESCRIPTION **SMA Right Angle Female Jack 4 Leg Standoff PC Board Receptacle, Bulkhead Rear Mount**

CAGE CODE **664U0**

SIGNATURE X

THIS DRAWING INCLUDING THE DESIGNS IS THE PROPERTY OF KONNECT RF AND IS NOT TO BE USED FOR ANY PURPOSE WITHOUT OUR APPROVAL.

Component	Material	Plating
Body, Washer, Nut	Brass	Gold
Chasdsis	Brass	Gold
Center Contact	BeCu	Gold
Insulator	Teflon	