KSW177430

Konnect RF

SPDT Switch DC-18GHZ

Failsafe Type

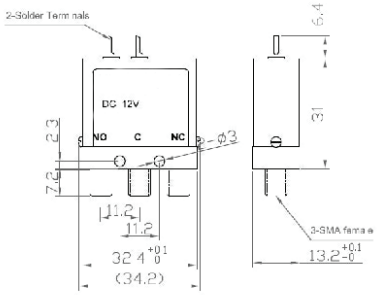

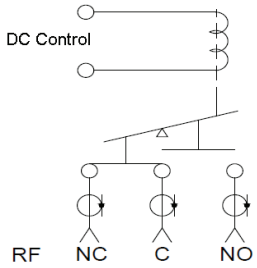

Application

. RF test and measuremnet
. Broadband wireless
. ATE(Automatic Test Equment)

Control Voltage	C-NC	C-NO
DC=12V (or others)	OFF	ON
DC=0V	ON	OFF

Features

. RF signal hot switching power **2W**
. Low insertions
. High Isolation

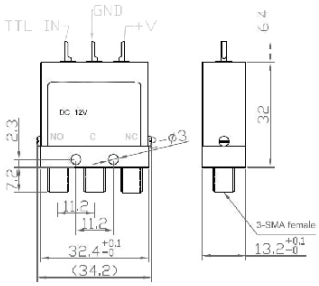

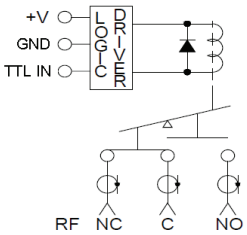

TTL IN	C-NC	C-NO
Logic “0” （0-0.8V）	ON	OFF
Logic “1” (2.5-5V）	OFF	ON

RF SPEC.:

Frequency Range	DC-3GHZ	3-6GHZ	6-12.4GHZ	12.4-18GHZ
VSWR	<1.20	<1.30	<1.40	<1.50
Insertion Loss	<0.2dB	<0.3dB	<0.4dB	<0.5dB
Isolation	>80dB	>70dB	>60dB	>60dB
Power Handing(CW)	100W	70W	50W	40W
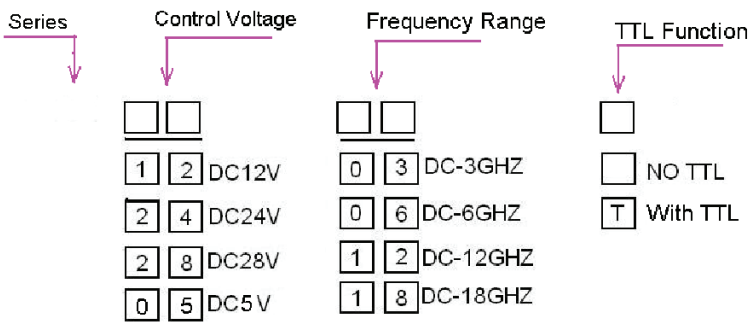
- RF Impedance: 50 ohm
- Operating Voltage: DC12V/240mA (Option:DC5V/480mA,DC24V/100mA,DC28V/110mA)
- Switching Time: <15ms
- Life:>1000000cycles
- Switching Sequence:Break Before Make
- Operating Temperature: -30 ～ +65℃ (Option -40 ～ +85℃)
- RF Interface: SMA female