PART NUMBER
KIS177297

REV.	DATE	COMMENTS	INITIAL

RoHS Compliant

Electrical Data

Frequency Range	0.851 - 0.869 GHz.
Insertion Loss	≤ 0.3 dB
Isolation	≥ 23
Return Loss	≥ 23 dB
Power Handling	
Forward	100W
Reverse	10W

Mechanical Data

Temperature Range: -20 °C - 80 °C

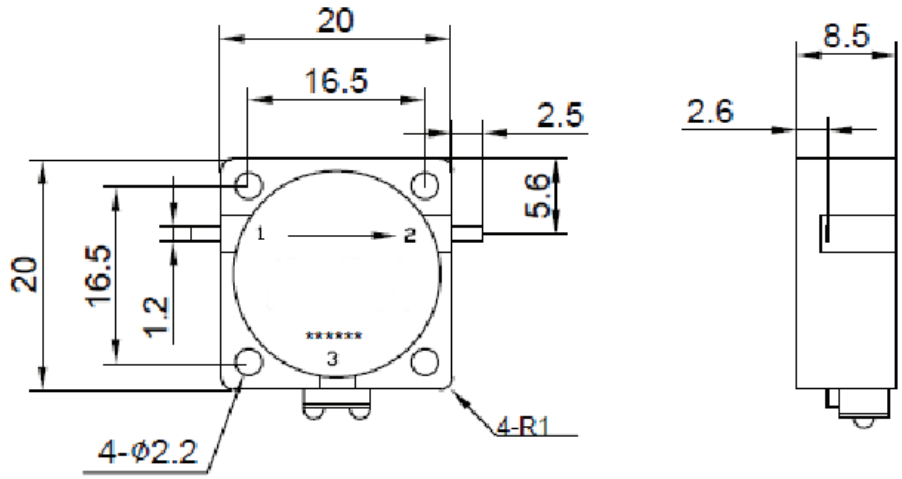

Drawing not to scale. Dimensions for reference only **Units: mm**

Konnect RF

WWW.KONNECTRF.COM
1-800-790-5887

PART NUMBER		DESCRIPTION
KIS177297		**Isolator, Drop In**
CAGE CODE **664U0**	SIGNATURE X	

THIS DRAWING INCLUDING THE DESIGNS IS THE PROPERTY OF KONNECT RF AND IS NOT TO BE USED FOR ANY PURPOSE WITHOUT OUR APPROVAL.