PART NUMBER	REV.			INITIAL
KCC177370				

Electrical Data

RoHS Compliant

Impedance 50 Ω

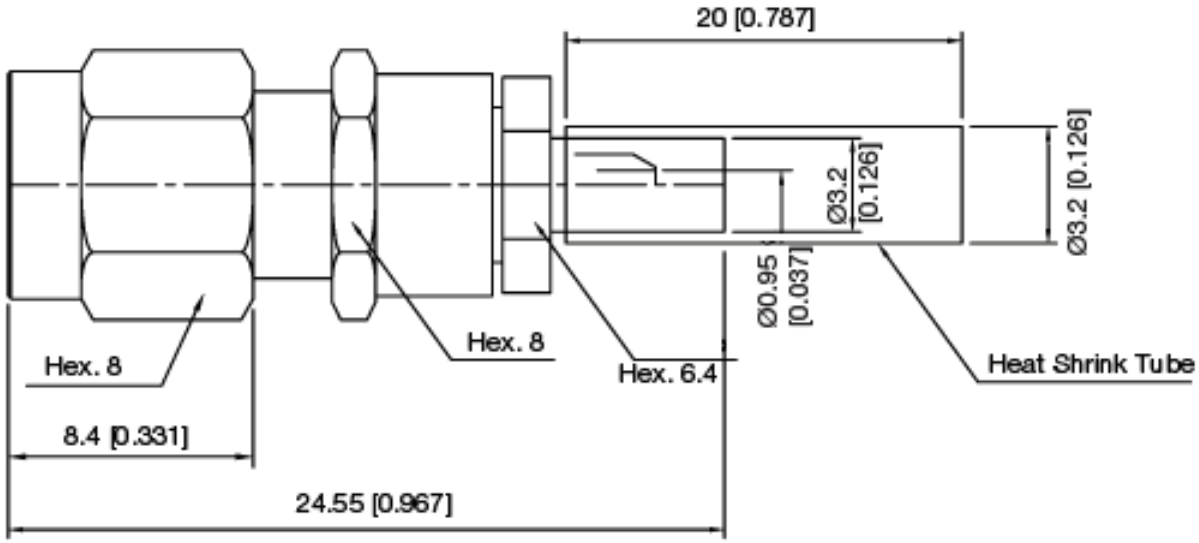

VSWR and Frequency Range Specifications are for reference and are dependant on cable type and other application specific conditions

Drawing not to scale. Dimensions for reference only

Konnect RF

WWW.KONNECTRF.COM
540 NW University Blvd. Ste. 109
Port Saint Lucie, Florida, 34986
1-800-790-5887

PART NUMBER	DESCRIPTION
KCC177370	**SMA Straight Male Plug Crimp/Clamp**

CAGE CODE	SIGNATURE
664U0	X

THIS DRAWING INCLUDING THE DESIGNS IS THE PROPERTY OF KONNECT RF AND IS NOT TO BE USED FOR ANY PURPOSE WITHOUT OUR APPROVAL.

Cable Types RG 178, 196

Materials

Body / Clamp Nut	Stainless Steel	Passivated
Coupling Cap	Stainless Steel	Passivated
Center Contact	Brass	Gold Plated
Cable Ferrule	Brass	Gold Plated
Gasket	Silicone Rubber	
Insulator	PTFE	