PART NUMBER

KAT177577

REV.	DATE	COMMENTS	INITIAL

RoHS Compliant

Electrical Data

Impedance	50 Ω
Frequency Range	DC - 3 GHz.
Attenuation Step Size	0-50 dB in 1 dB Steps
Insertion Loss	≤1.2 dB
Attenuation Accuracy	+/- 0.5 dB(≤10 dB)
	+/- 0.8 dB or 3% (≤50 dB)
Average Power	2W
Peak Power	100W (5μs pulse width with 0.5% duty cycle)
VSWR	1.35

Mechanical Data

Temperature Range: -20 °C - 85 °C

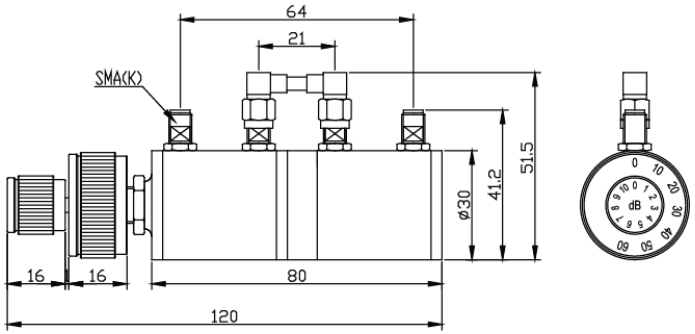

Drawing not to scale. Dimensions for reference only **Units: mm**

Konnect RF

WWW.KONNECTRF.COM
1-800-790-5887

PART NUMBER

KAT177577

DESCRIPTION

Step Attenuator, SMA Female

CAGE CODE

664U0

SIGNATURE

X

THIS DRAWING INCLUDING THE DESIGNS IS THE PROPERTY OF KONNECT RF AND IS NOT TO BE USED FOR ANY PURPOSE WITHOUT OUR APPROVAL.

Component	Material	Plating
Connectors	Brass	Nickel
Center Contact	BeCu	Gold