PART NUMBER

KAD179722

REV.	DATE	COMMENTS	INITIAL

RoHS Compliant

Electrical Data

Impedance	50 Ω
Frequency Range	DC - 40 GHz.
Insertion Loss	≤0.3dB @ 40 GHz
Insulation Resistance	5,000 MΩ Min
Dielectric Withstanding Voltage	1,000 V Max @ Sea Level
VSWR	≤ 1.20 @ DC-40GHz

Mechanical Data

Temperature Range:	-55 °C - 165 °C
Durability	500 Cycles

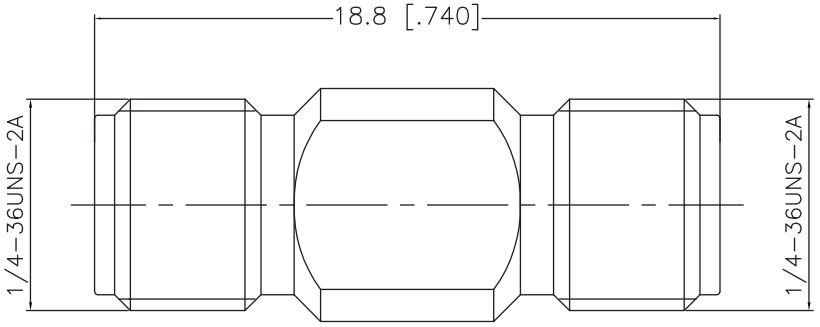

Drawing not to scale. Dimensions for reference only **Units: mm (inches)**

Konnect RF

WWW.KONNECTRF.COM
1-800-790-5887

PART NUMBER

KAD179722

DESCRIPTION

Adapter, In-Series, 2.92mm Female Jack to Female Jack

CAGE CODE

664U0

SIGNATURE

X

THIS DRAWING INCLUDING THE DESIGNS IS THE PROPERTY OF KONNECT RF AND IS NOT TO BE USED FOR ANY PURPOSE WITHOUT OUR APPROVAL.

Component	Material	Plating/Finish
Body	Stainless Steel	Passivated
Center Contact	BeCu	Gold
Insulator	PEEK	