PART NUMBER

KAD179640

REV.	DATE	COMMENTS	INITIAL

RoHS Compliant

Electrical Data

Impedance	50 Ω
Frequency Range	DC - 27 GHz.
VSWR	1.15 Max

Mechanical Data

Temperature Range:	-55 °C - 125 °C

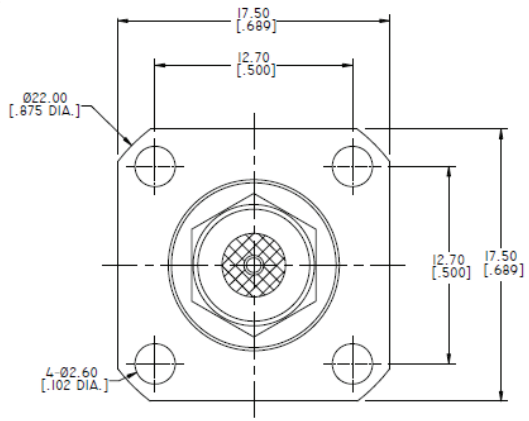

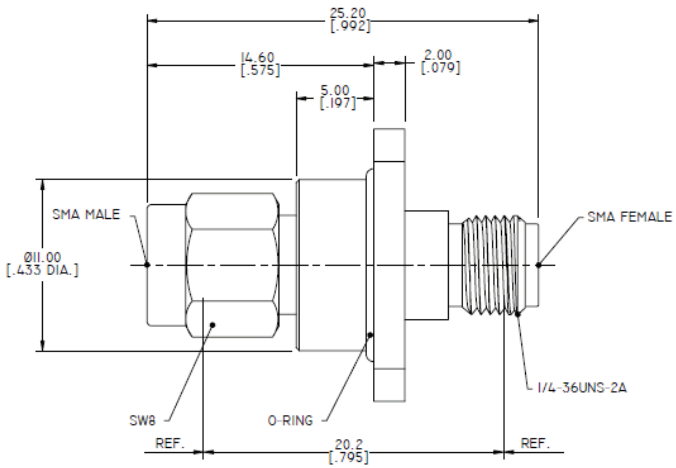

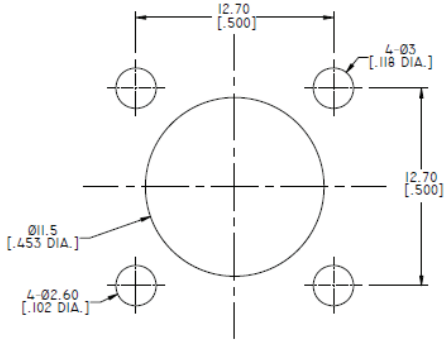

RECOMMENDED MOUNTING HOLE

Drawing not to scale. Dimensions for reference only **Units: mm (Inches)**

Konnect RF

WWW.KONNECTRF.COM
1-800-790-5887

PART NUMBER

KAD179640

DESCRIPTION **Adapter, In-Series, SMA Male Plug to Female Jack, 4 Hole Flange Mount, O-Ring**

CAGE CODE **664U0**

SIGNATURE X

THIS DRAWING INCLUDING THE DESIGNS IS THE PROPERTY OF KONNECT RF AND IS NOT TO BE USED FOR ANY PURPOSE WITHOUT OUR APPROVAL.

Component	Material	Plating/Finish
Body & Coupling Nut	Stainless Steel	Passivated
Center Contact	BeCu	Gold
Insulator	PTFE & PEI	
O-Ring	Silicone Rubber	